metabo®

STS 7000

0901006040 10

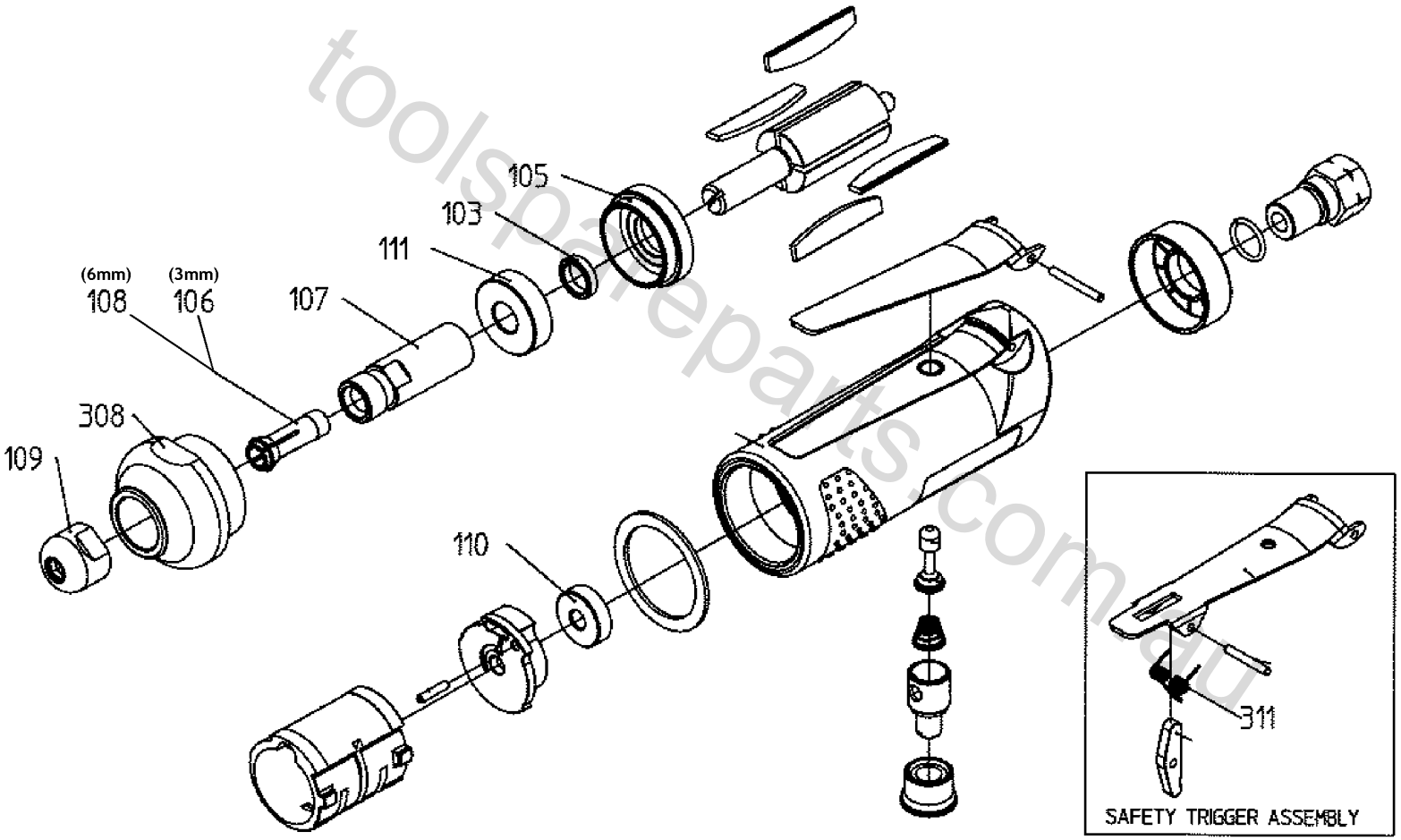

toolspareparts.com.au

STS 7000

0901006040 10

Position	Amount	Type number	Description	PG
103	1	1319697230	BUSHING STS 7000	19
105	1	1319697248	BUSHING STS 7000	26
106	1	1319697744	COLLET CHUCK 3MM STS 7000	29
107	1	1319697256	DRIVE SHAFT STS 7000	26
108	1	1319697264	COLLET CHUCK 6MM STS 7000	29
109	1	1319697272	TENSION NU STS 7000	24
110	1	7100047262	DEEP GROOVE BALL BEARING 6X19X6 626 -2Z	15
111	1	7100010180	DEEP GROOVE BALL BEARING	18
308	1	1319697280	LOCK NUT STS 7000	29
311	1	1319697299	SPRING STS 7000	14

toolsspareparts.com.au